F2.5, F2.6

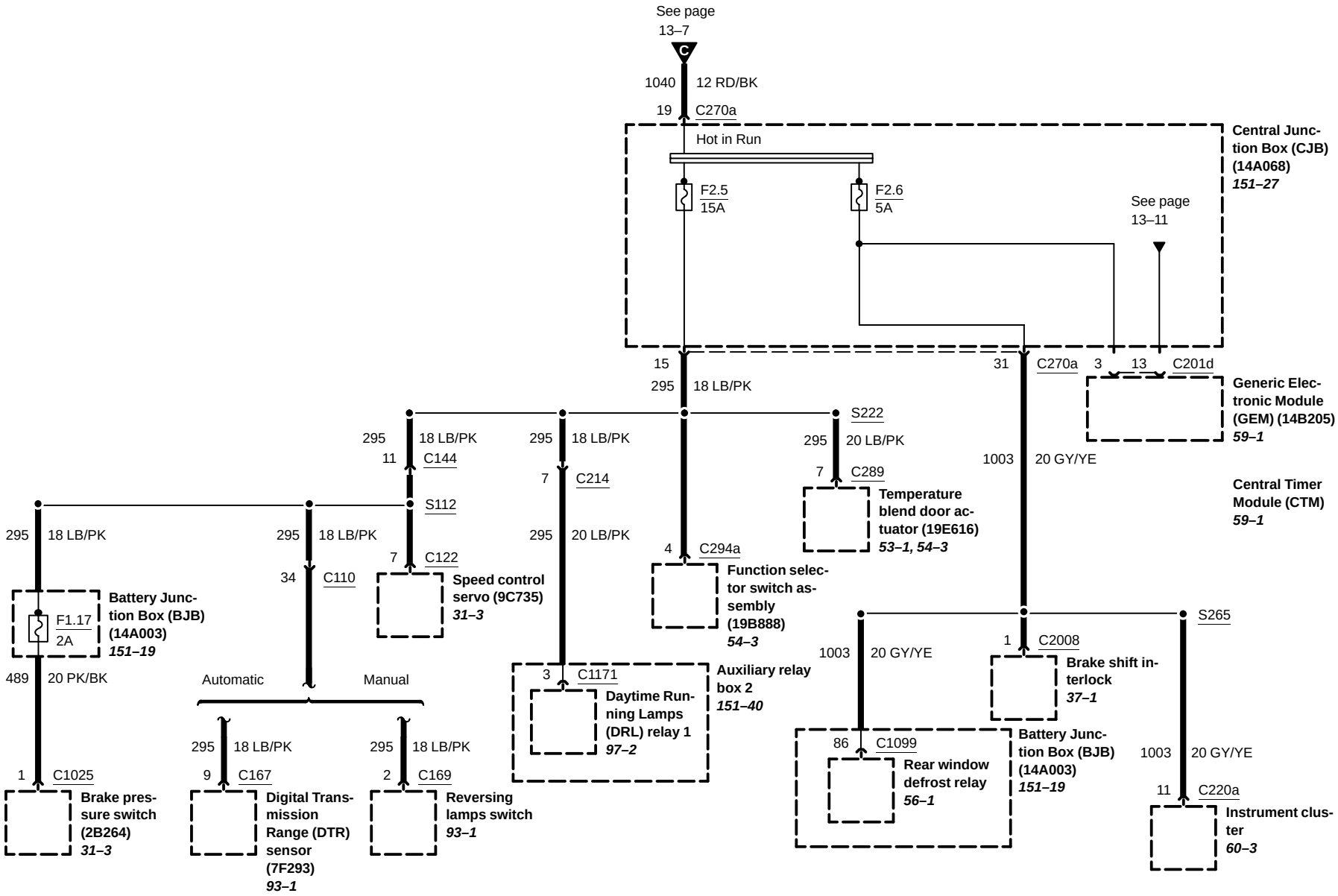
See page 13–7
C
1040 12 RD/BK
19 C270a
Hot in Run
F2.5 15A
F2.6 5A
Central Junction Box (CJB) (14A068) 151–27
See page 13–11
15 295 18 LB/PK
31 C270a 3 13 C201d
Generic Electronic Module (GEM) (14B205) 59–1
295 18 LB/PK 11 C144
295 18 LB/PK 7 C214
S222
295 20 LB/PK 7 C289
1003 20 GY/YE
Central Timer Module (CTM) 59–1
Temperature blend door actuator (19E616) 53–1, 54–3
S112
295 18 LB/PK
295 18 LB/PK 34 C110
7 C122
295 20 LB/PK
4 C294a
Speed control servo (9C735) 31–3
Function selector switch assembly (19B888) 54–3
Battery Junction Box (BJB) (14A003) 151–19
F1.17 2A
489 20 PK/BK
Automatic
Manual
3 C1171
Daytime Running Lamps (DRL) relay 1 97–2
Auxiliary relay box 2 151–40
S265
1003 20 GY/YE
1 C2008
Brake shift interlock 37–1
86 C1099
Rear window defrost relay 56–1
Battery Junction Box (BJB) (14A003) 151–19
1003 20 GY/YE
11 C220a
Instrument cluster 60–3
295 18 LB/PK 9 C167
295 18 LB/PK 2 C169
1 C1025
Brake pressure switch (2B264) 31–3
Digital Transmission Range (DTR) sensor (7F293) 93–1
Reversing lamps switch 93–1